PAYAPRESS

Professional Busbar Processing Machines

INDUSTRY 4.0

Catalogue 2022

PAYAPRESS

Payapress industrial company is a grand manufacturer of Busbar Processing Machines in the worldwide. Widespread domestic and foreign usage of our products by hundreds of leading electrical panel manufacturers confirms our claim. Since designing the products took years to accomplish, we guarantee the high quality of our products.

Professional Busbar Processing Machines are designed in order to facilitate bending, punching and cutting busbars.
Each type of Busbar Machine provides users with a range of functions. The most limited type which is provided with one power pack allows users to use cutting, bending and punching busbars one by one. In organizations where there is a huge pile of works should be done, therefore all three parts of busbar machine should be favorably used simultaneously, Busbar machine with three power packs should be recommended.
Some options can be offered to moderate function of busbar machine; Such as Programmable Length Stopper which is replaced by Handy Length Stopper in punching and cutting and cause high accuracy in positioning, Rollers provide better Busbar movement as well.
Busbar Bending Machine equipped with high accuracy digital angle indicator which allows high performance bending and also in puncher, laser pointer helps finding center of holes easily. Movable stripper plates on busbar Punching Machine as an advantage prevents fraction on busbars.

Punching
Cutting
Normal Bending
Step Bending
Edge Bending
Twist Bending
Cable Cutting
Crimping Press
CNC
Computer Numerical Control
Laser Pointer

HBC-A120/160

Bender | Puncher | Cutter

Model	HBC-A120	HBC-A160
Function	Cutting, Punching and Bending Busbars Simultaneously	Cutting, Punching and Bending Busbars Simultaneously
Bender Capacity	Up to 120 x 12 mm	Up to 160 x 15 mm
Cutting Capacity	Up to 120 x 12 mm	Up to 160 x 15 mm
Punching Capacity	Circle Dies: M6 up to M18 Oval and Rectangle Dies (Optional)	Circle dies: M6 up to M18 Oval and Rectangle Dies (Optional)
Bender Controller	Electronic Controller High Accuracy Encoder	Electronic Controller High Accuracy Encoder
Bender Molds	Step Mold (Optional) Edge Bending Mold (Optional) Twist Mold (Optional) End-Bending Mold (Optional)	Step Mold (Optional) Edge Bending Mold (Optional) Twist Mold (Optional) End-Bending Mold (Optional)
Puncher Center Finder	Laser Pointer	Laser Pointer
Length Measuring in Puncher and Cutter	Handy Length Stopper Programmable Length Stopper (Optional)	Handy Length Stopper Programmable Length Stopper (Optional)
Hydraulic System	Three Separate Power Packs Double Acting System	Three Separate Power Packs Double Acting System
Operating Pressure	250 Bar	250 Bar
Power Rating	3 x 1.5 Kw	3 x 1.5 Kw
Voltage	380 Volt - 3/50 Hz	380 Volt - 3/50 Hz
Oil	Hydraulic Oil H68 - 70 Liters	Hydraulic Oil H68 - 70 Liters
Main Desk Dimension	200 x 110 x 100 (H) cm	200 x 110 x 100 (H) cm
Roller Desk Dimension	110 x 110 cm	110 x 100 cm

PAYAPRESS

Bender

HBC-A120/160

- Bender controller equiped by spring back compensation system
- Digital angle indicator leads to perfect bending result
- Rotatable plates prevent fractions in busbars surface

Step mold (optional)
- To create too closed bends in one stroke
- Could be designed in different sizes by order

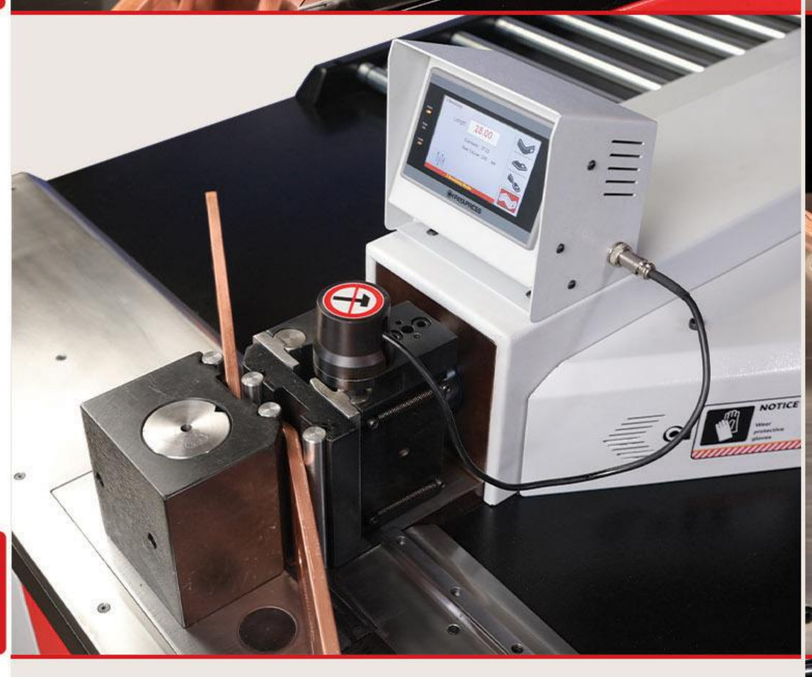

Edge bending mold (optional)
- To bend busbars from edge side
- Busbar size limits: 40 x 10 mm up to 90 degree and 50 x 10 mm up to 45 degree

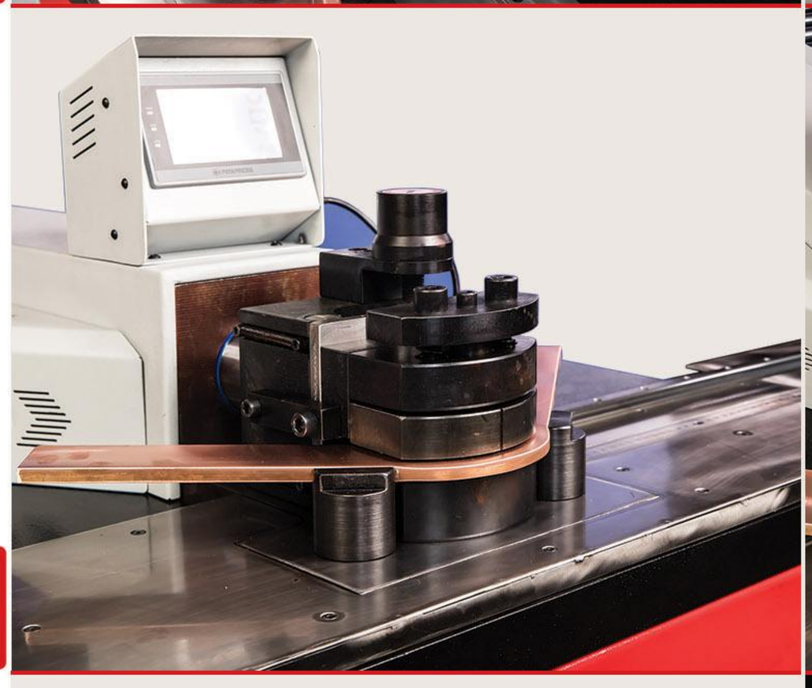

Twist bending mold (optional)
- To twist busbars for special purpose
- Busbar size limits: 60 x 10 mm up to 90 degree

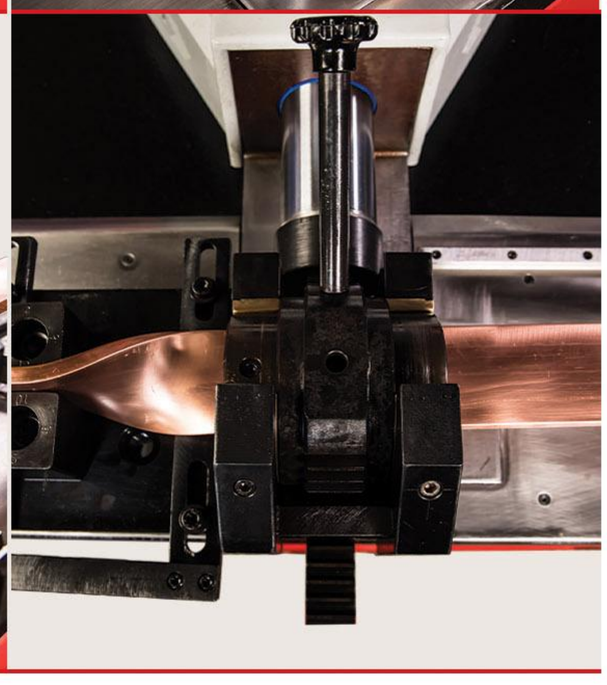

Puncher

HBC-A120/160

Laser pointer helps to find center of holes easily
- Easy and changeable dies
- Movable stripper plate prevents fraction in dies
- Double acting hydraulic systems prevents sticking dies in busbar after punching

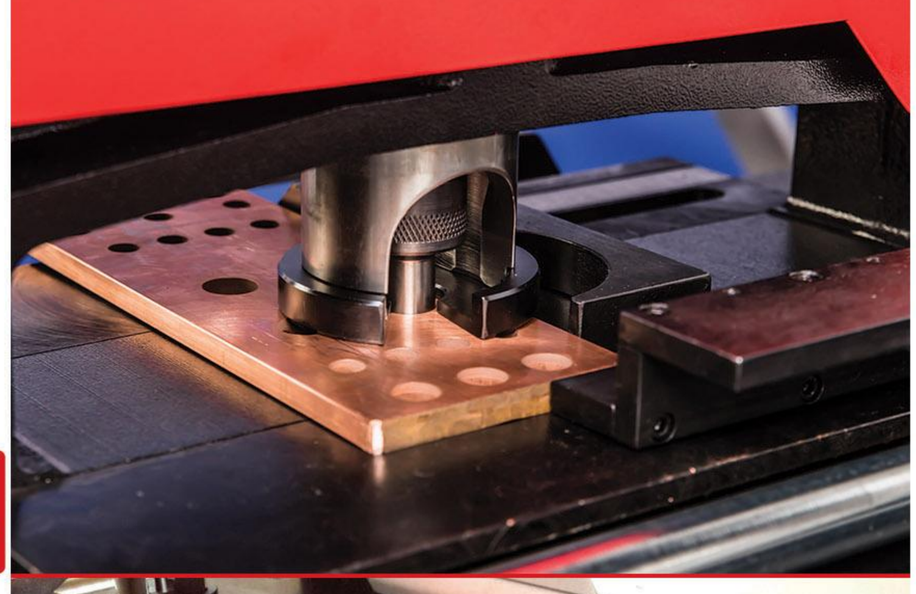

Guides could be moved up to center of dies
Rollers at two sides of puncher for ease of busbar movement
Programmable Length Stopper cause high accuracy in positioning of holes (optional)
- Could be programmed in absolute and incremental positions
- Programmable for 20 positions

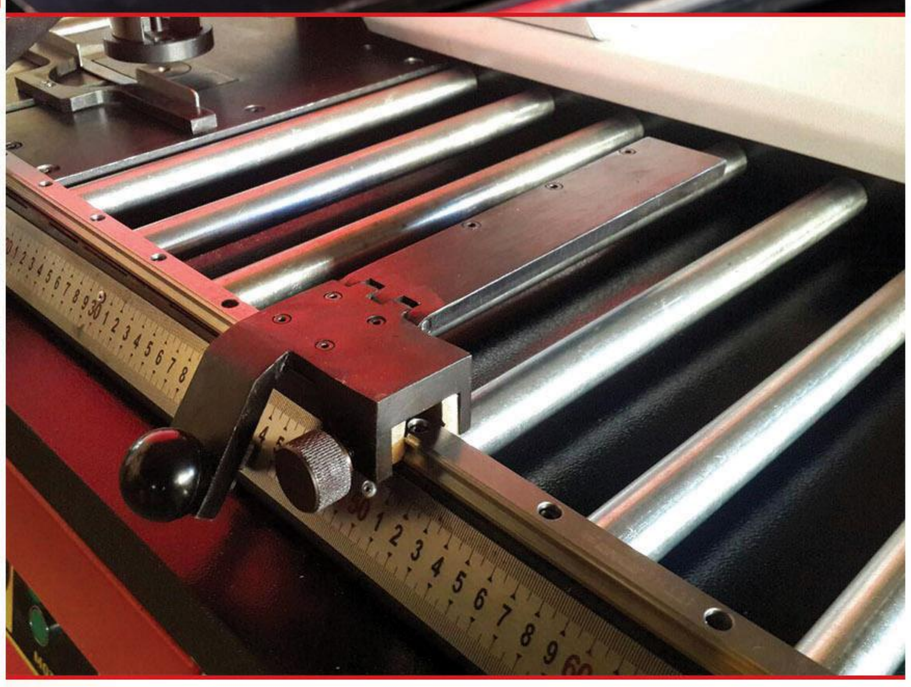

Handy Length Stopper
With high accuracy adjustment

Circle dies from M6 up to M18
Oval and rectangle dies (optional)

PAYAPRESS

Cutter

HBC-A120/160

- Precise cutting with high quality
- Perfect finishing after cutting
- Center oriented guide leads to the best result

Programmable Length Stopper cause high accuracy in positioning of cuts (optional)

- Could be programmed in absolute and incremental positions
- Programmable for 20 positions

Rollers at two sides of cutter for ease of busbar movement

Handy Length Stopper with high accuracy adjustment

PAYAPRESS

HBC-CP120/160

Cutter | Puncher

Model	HBC-CP120	HBC-CP160
Function	Cutting and Punching Busbars Simultaneously	Cutting and Punching Busbars Simultaneously
Cutting Capacity	Up to 120 x 12 mm	Up to 160 x 15 mm
Punching Capacity	Circle Dies: M6 up to M18 Oval and Rectangle Dies (Optional)	Circle Dies: M6 up to M18 Oval and Rectangle Dies (Optional)
Puncher Center Finder	Laser Pointer	Laser Pointer
Length Measuring in Puncher and Cutter	Handy Length Stopper Programmable Length Stopper (Optional)	Handy Length Stopper Programmable Length Stopper (Optional)
Hydraulic System	Two Separate Power Packs Double Acting System	Two Separate Power Packs Double Acting System
Operating Pressure	250 Bar	250 Bar
Power Rating	2 x 1.5 Kw	2 x 1.5 Kw
Voltage	380 Volt - 3/50 Hz	380 Volt - 3/50 Hz
Oil	Hydraulic Oil H68 - 70 Liters	Hydraulic Oil H68 - 70 Liters
Main Desk Dimension	250 x 110 x 100 (H) cm	250 x 110 x 100 (H) cm
Roller Desk Dimension	150 x 110 cm	150 x 100 cm

INDUSTRY 4.0

PAYAPRESS

HBC-BE120/160

Bender

Model	HBC-BE120	HBC-BE160
Function	Bending Busbars	Bending Busbars
Bender Capacity	Up to 120 x 12 mm	Up to 160 x 15 mm
Bender Controller	Electronic Controller High Accuracy Encoder	Electronic Controller High Accuracy Encoder
Bender Molds	Step Mold (Optional) Edge Bending Mold (Optional) Twist Mold (Optional) End-Bending Mold (Optional)	Step Mold (Optional) Edge Bending Mold (Optional) Twist Mold (Optional) End-Bending Mold (Optional)
Length Measuring in Bender	Programmable Length Stopper	Programmable Length Stopper
Hydraulic System	One Power Pack Double Acting System	One power pack Double Acting System
Operating Pressure	250 Bar	250 Bar
Power Rating	1 x 1.5 Kw	1 x 1.5 Kw
Voltage	380 Volt - 3/50 Hz	380 Volt - 3/50 Hz
Oil	Hydraulic Oil H68 - 30 Liters	Hydraulic Oil H68 - 30 Liters
Main Desk Dimension	130 x 110 x 100 (H) cm	130 x 110 x 100 (H) cm

INDUSTRY 4.0

PAYAPRESS

HBC-CP.CNC200

Cutter | Puncher, CNC

CNC

Model	HBC-CP.CNC200
Function	Cutting and Punching Busbars Simultaneously
Cutting Capacity	Up to 200 x 15 mm
Punching Capacity	Busbar Size: 200 x 15 mm Circle Dies: M6 up M20
Puncher Center Finder	CNC Controller
Length Measuring in Puncher and Cutter	Ball Screw and Servo Motors
Hydraulic System	One Power Pack, Double Acting System
Max Force	300 (KN)
Operating Pressure	200 Bar
Power Rating	1 x 11 Kw
Voltage	380 Volt - 3/50 Hz
Oil	Hydraulic Oil H68 - 200 liters
Main Desk Dimension	537 x 240 x 188 (H) cm

INDUSTRY 4.0

Professinal CNC Busbar Machine is designed in order to facilitate punching & cutting Busbars in high speed with high percision.
This Machine is equipped with **seven tool stations** and could handle busbars in length of 4 meters with thickness of 15 mm.
CNC controller provide wide rang of different size of holes punching in shortest time with high accuracy.
Extreme durability and unrivalled speed characterize the professional production line.
The machine is **fully automated** once the production process is launched.
The linear tool carrier(y-axis) has 7 stations that hold 6 punching and one cutting tool.
Punches and dies can be changed rapidly.

PAYAPRESS

HBC-PC120

Workshop Busbar Processing Machine

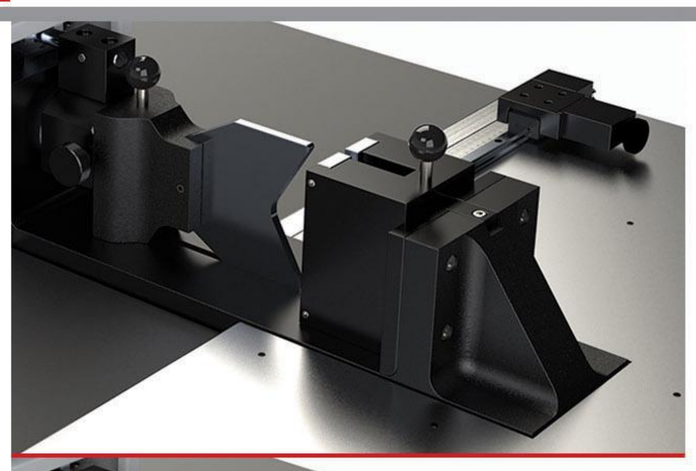

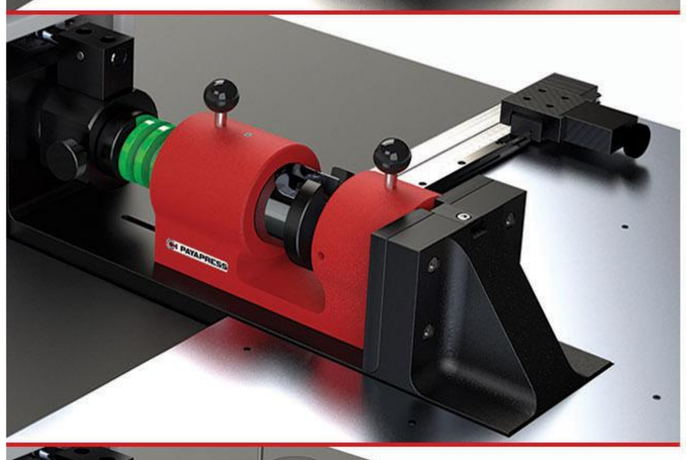

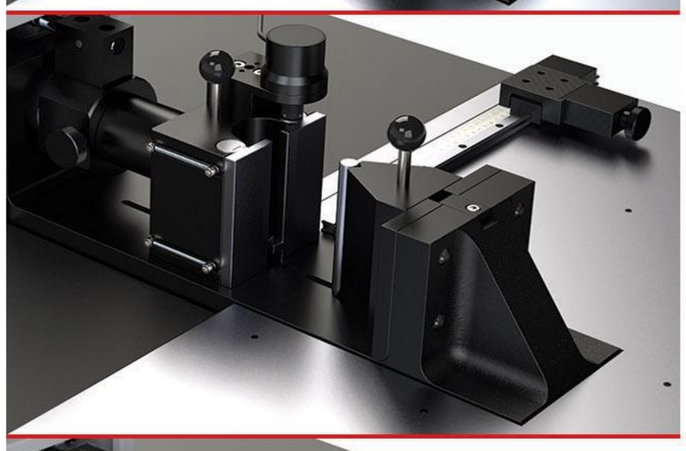

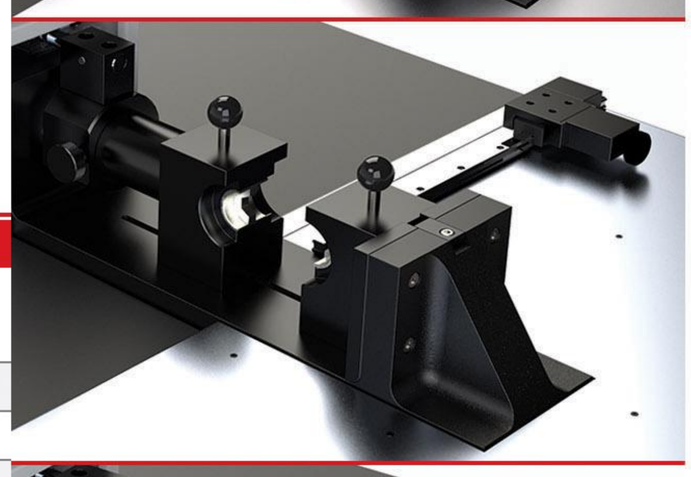

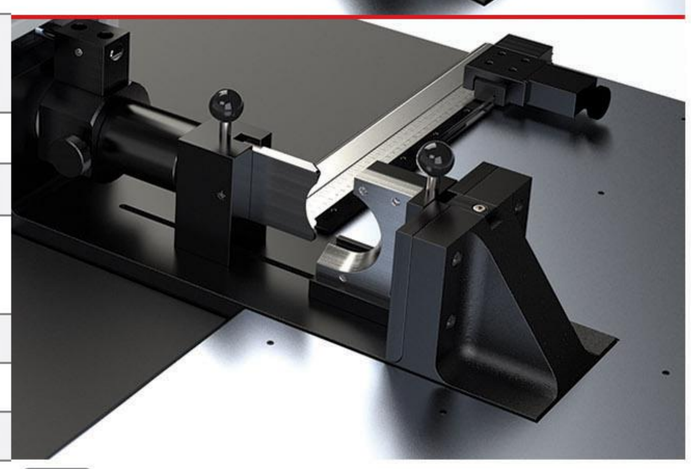

Model	HBC-PC120
Function	Cutting, Punching and Bending Busbars One by One Crimping/Cutting Cable (Optional)
Bender Capacity	Up to 120 x 12 mm
Cutting Capacity	Up to 120 x 12 mm
Punching Capacity	Circle Dies: M6, M8, M10, M12, M14, M16, M18 Crimping/Cutting Size: up to 300 mm^2
Crimping Cable Capacity	Up to 300 mm^2
Cutting Cable	Up to 240
Bender Controller	Electronic Controller High Accuracy Encoder
Hydraulic System	One Power Pack, Double Acting System
Puncher Laser Finder	Laser Pointer
Operating Pressure	150 Bar
Power Rating	1 x 1.5 Kw
Voltage	220 Volt - 1/50 Hz
Oil	Hydraulic Oil H68 - 20 liters
Main Desk Dimension	100 x 120 x 101 (H) cm

INDUSTRY 4.0

PAYAPRESS

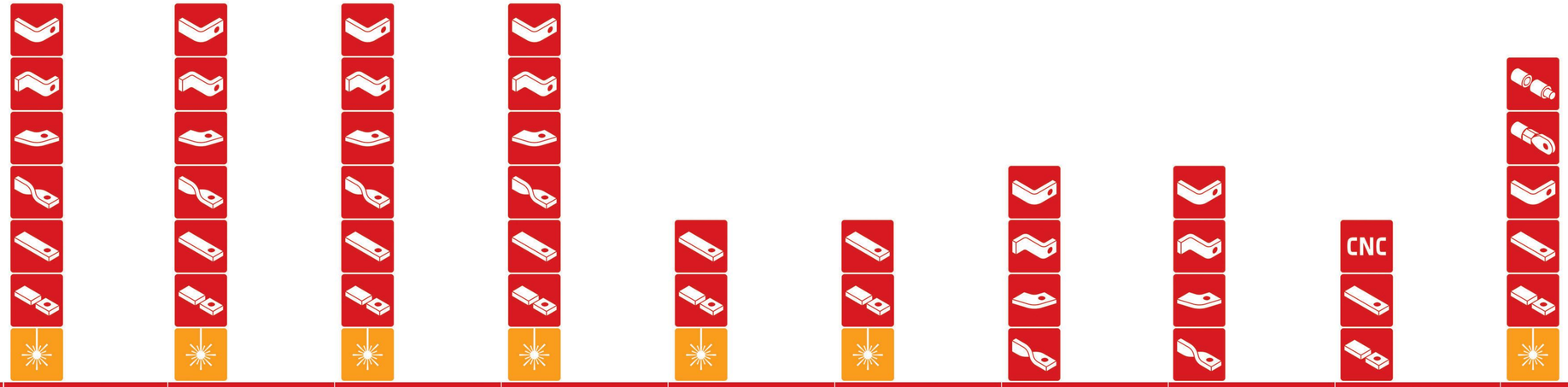

Model	HBC-A120	HBC-A160	HBC-B120	HBC-B160	HBC-CP120	HBC-CP160	HBC-BE120	HBC-BE160	HBC-CP.CNC200	HBC-PC120
Function	Cutting, Punching and Bending Busbars Simultaneously	Cutting, Punching and Bending Busbars Simultaneously	Cutting, Punching and Bending Busbars One by One	Cutting, Punching and Bending Busbars One by One	Cutting and Punching Busbars Simultaneously	Cutting and Punching Busbars Simultaneously	Bending Busbars	Bending Busbars	Cutting and Punching Busbars Simultaneously	Cutting, Punching and Bending Busbars One by One Crimping/Cutting cable (Optional)
Bender Capacity	Up to 120 x 12 mm	Up to 160 x 15 mm	Up to 120 x 12 mm	Up to 160 x 15 mm			Up to 120 x 12 mm	Up to 160 x 15 mm		Up to 120 x 12 mm
Cutting Capacity	Up to 120 x 12 mm	Up to 160 x 15 mm	Up to 120 x 12 mm	Up to 160 x 15 mm	Up to 120 x 12 mm	Up to 160 x 15 mm			Up to 200 x 15 mm	Up to 120 x 12 mm
Punching Capacity	Circle Dies: M6, M8, M10 M12, M14, M16, M18 Oval and Rectangle Dies (Optional)	Circle Dies: M6, M8, M10 M12, M14, M16, M18 Oval and Rectangle Dies (Optional)	Circle Dies: M6, M8, M10 M12, M14, M16, M18 Oval and Rectangle Dies (Optional)	Circle Dies: M6, M8, M10 M12, M14, M16, M18 Oval and Rectangle Dies (Optional)	Circle Dies: M6, M8, M10 M12, M14, M16, M18 Oval and Rectangle Dies (Optional)	Circle Dies: M6, M8, M10 M12, M14, M16, M18 Oval and Rectangle Dies (Optional)			Busbar Size: 200 x 15 mm Circle Dies: M6 up M20	Circle Dies: M6, M8, M10 M12, M14, M16, M18 Crimping/Cutting Size: up to 300 mm^2
Bender Controller	Electronic Controller High Accuracy Encoder	Electronic Controller High Accuracy Encoder	Electronic Controller High Accuracy Encoder	Electronic Controller High Accuracy Encoder			Electronic Controller High Accuracy Encoder	Electronic Controller High Accuracy Encoder		Electronic Controller High Accuracy Encoder
Bender Molds	Step Mold (Optional) Edge Bending Mold (Optional) Twist Mold (Optional) End-Bending Mold (Optional)	Step Mold (Optional) Edge Bending Mold (Optional) Twist Mold (Optional) End-Bending Mold (Optional)	Step Mold (Optional) Edge Bending Mold (Optional) Twist Mold (Optional) End-Bending Mold (Optional)	Step Mold (Optional) Edge Bending Mold (Optional) Twist Mold (Optional) End-Bending Mold (Optional)			Step Mold (Optional) Edge Bending Mold (Optional) Twist Mold (Optional) End-Bending Mold (Optional)	Step Mold (Optional) Edge Bending Mold (Optional) Twist Mold (Optional) End-Bending Mold (Optional)		
Puncher Center Finder	Laser Pointer	Laser Pointer	Laser Pointer	Laser Pointer	Laser Pointer	Laser Pointer			CNC Controller	Laser Pointer
Length Measuring in Puncher and Cutter	Handy Length Stopper	Handy Length Stopper	Handy Length Stopper	Handy Length Stopper	Handy Length Stopper	Handy Length Stopper			Ball Screw and Servo Motors	
Length Measuring in Bender	Handy Metering System	Handy Metering System	Handy Metering System	Handy Metering System			Programmable Length Stopper	Programmable Length Stopper		
Hydraulic System	Three Separate Power Packs Double Acting System	Three Separate Power Packs Double Acting System	One Power Pack Double Acting System	One Power Pack Double Acting System	Two Separate Power Packs Double Acting System	Two Separate Power Packs Double Acting System	One Power Pack Double Acting system	One Power Pack Double Acting System	One Power Pack Double Acting System	One Power Pack Double Acting System
Operating Pressure	250 Bar	250 Bar	250 Bar	250 Bar	250 Bar	250 Bar	250 Bar	250 Bar	200 Bar	150 Bar
Power Rating	3 x 1.5 Kw	3 x 1.5 Kw	1 x 1.5 Kw	1 x 1.5 Kw	2 x 1.5 Kw	2 x 1.5 Kw	1 x 1.5 Kw	1 x 1.5 Kw	1 x 11 Kw	1 x 1.5 Kw
Voltage	380 Volt - 3/50 Hz	380 Volt - 3/50 Hz	380 Volt - 3/50 Hz	380 Volt - 3/50 Hz	380 Volt - 3/50 Hz	380 Volt - 3/50 Hz	380 Volt - 3/50 Hz	380 Volt - 3/50 Hz	380 Volt - 3/50 Hz	220 Volt - 1/50 Hz
Oil	Hydraulic Oil H68 - 45 Liters	Hydraulic Oil H68 - 45 Liters	Hydraulic Oil H68 - 30 Liters	Hydraulic Oil H68 - 30 Liters	Hydraulic Oil H68 - 45 Liters	Hydraulic Oil H68 - 45 Liters	Hydraulic Oil H68 - 30 Liters	Hydraulic Oil H68 - 30 Liters	Hydraulic Oil H68 - 200 Liters	Hydraulic Oil H68 - 20 Liters
Main Desk Dimension	200 x 110 x 100 (H) cm	200 x 110 x 100 (H) cm	200 x 110 x 100 (H) cm	200 x 110 x 100 (H) cm	250 x 110 x 100 (H) cm	250 x 110 x 100 (H) cm	130 x 110 x 100 (H) cm	130 x 110 x 100 (H) cm	537 x 240 x 188 (H) cm	100 x 120 x 101 (H) cm
Roller Desk Dimension	110 x 100 cm	110 x 100 cm	110 x 100 cm	110 x 100 cm	150 x 110 cm	150 x 110 cm				

PAYAPRESS

PAYAPRESS

web site | www.payapress.com
Email | sales@payapress.com